AgriCos e-Newsletter
ISSN: 2582-7049
AgriCos e-Newsletter
Open Access Multidisciplinary Monthly Online Magazine
Volume: 03 Issue: 02 February 2022 Article No: 12

Design of Refrigeration Van Container for Preservation of Perishable Products-Seedlings

Tanzim Khan[1], Gopal Shinde[2] and Khemchand Kapgate[3]
[1]Junior Engineer (Mechanical), NAHEP-VNMKV, Parbhani (M.S.)
[2]Principal Investigator, NAHEP-VNMKV, Parbhani (M.S.)
[3]Research Associate, NAHEP-VNMKV, Parbhani (M.S.)

SUMMARY

Design, develop, and execute a Refrigeration Van Containerr is the purpose of this paper. This contributes to the preservation of more & more Perishable Products/Seedlings. Refrigeration Van Container the purpose behind developments are their widespread applications, today's peoples and industry demands for Refrigeration Van Container are on the rise. Preservation of Perishable Products/Seedlings operations has had nothing in common in terms of research. More human efforts may be exposed to risks such as skin disease and respiratory difficulties as a result of the transportation and preservation of foods & seedlings. Furthermore, the nature of the Preservation method, which necessitates repetitive work, makes it tedious, time-consuming, and effort-intensive. When reefer van is correctly incorporated into jobs, the entire operational process can be better managed, resulting in cost savings in human labour and time. Furthermore, it would provide the opportunity to limit or eliminate human exposure to tough and dangerous situations, resolving the majority of the issues associated with safety when many operations are occurring at the same time. The creation of a Refrigeration Van Container system is motivated by these factors. To emphasise accuracy in system Design of Refrigeration Van Container and cooling unit selection is used in the project.

INTRODUCTION

The estimated annual production of fruits and vegetables in the country is about 130 million tons. This is 18% of our agricultural production. Production is slowly increasing due to the good availability of packages of different farming climates and methods. Although there is a lot of scope to increase production, the lack of cold storage and cold storage facilities is making it difficult to utilize the potential. The cold storage facilities now available are for items like potatoes, oranges, apples, grapes, pomegranates, flowers etc.

Why Storage and Conservation of foods needed?

Food and many other items can be stored at low temperatures, which slow down the activity of microorganisms. Microorganisms are harmful and contain bacteria, yeast and mold. Low temperatures do not destroy those degrading agents due to high temperatures, But their activity greatly reduces, providing a practical way to preserve perishables in a natural state that would not otherwise be heated. The low temperatures required for protection often depend on short or long term shortages and the storage time known as the type of product. The cold storage unit includes a refrigeration system to maintain the room environment required for the storage of goods. The refrigeration system works on two principles:

- Vapour Absorption Refrigeration Cycle (VAC)
- Vapour Compression Refrigeration Cycle (VCC)

Although VAS is relatively expensive, it is very profitable to operate and fully compensates for the high initial investment. Such a system should be chosen to conserve energy and operating costs wherever possible. However, when the temperature requirement is less than 350C it has its own limits and most fruits and vegetables except seeds, mangoes require less than 350C for long storage. VAC is relatively inexpensive. There are three types of VCS systems available in the storage room depending on the cooling system e.g. Diffuser type, bunker type and fin coil type. The diffuser type is relatively expensive and is chosen only when the height of the storage room is low. The operating cost of such units is also high. The bunker type is the cheapest and is preferred when the height of the storage room is generally more than 11.5 m. Its operating cost is also low. Although the fin coil type is about 5% more expensive than the bunker type, it is energy efficient with low energy consumption and high storage space for products. Such a system is used for a room height of 5.4 m. In a refrigeration system, refrigerants are used to evaporate heat at low temperatures and bring pressure from the storage space, and release condensed heat at high temperatures under the pressure of a condenser. Freon used to be a common refrigerant

but its use has been banned since 2008 due to its environmental degradation. That is why Ammonia is being used and preferred in horticulture units for horticulture and plantation products.

In general, there are three groups of products:

- Live food at storage, distribution and sale
- Ex. Fruits and vegetables,
- Foods that are no longer alive and have been processed in some form
- Ex. Meat and fish products, and
- Items that benefit from storage at controlled temperatures

Ex. Beer, tobacco, khandasari etc. technology

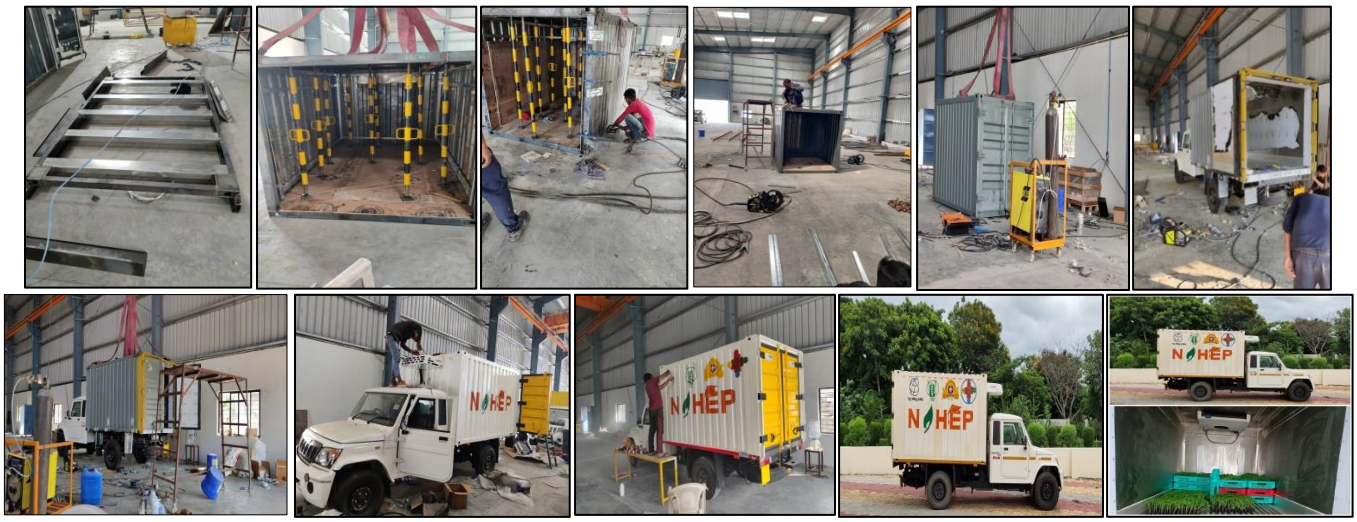

Figure 1.1: Process of completion of Refrigeration Van

Material Selection

It is necessary to evaluate the particular type of forces imposed on components as well as temperature achieve with a view to determining the exact mechanical properties and necessary material for each equipment. A very brief analysis of each main component of the container follows:

The main components of the lift are shown:

I. MS Container
II. Cooling Unit (Carrier, Citimax 280)
III. Outer Panel
IV. Inner Panel
V. Flooring
VI. Insulation
VII. Door Hardware
VIII. Lights
IX. Drainage Proper
X. FRP Coating
XI. Door Sealing

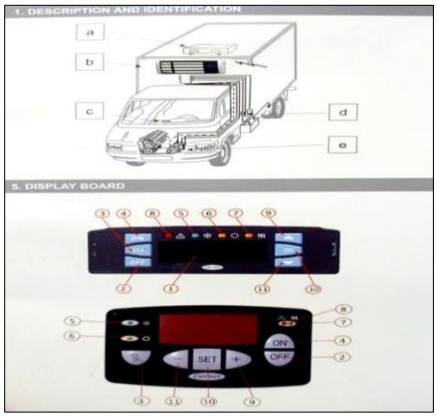

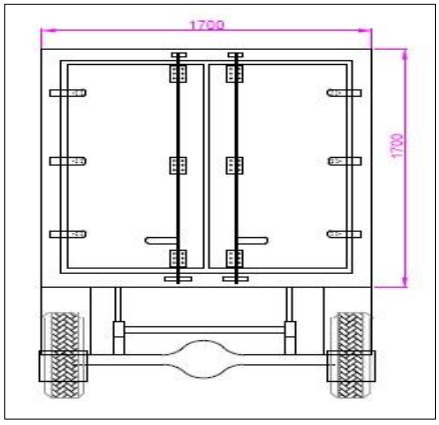

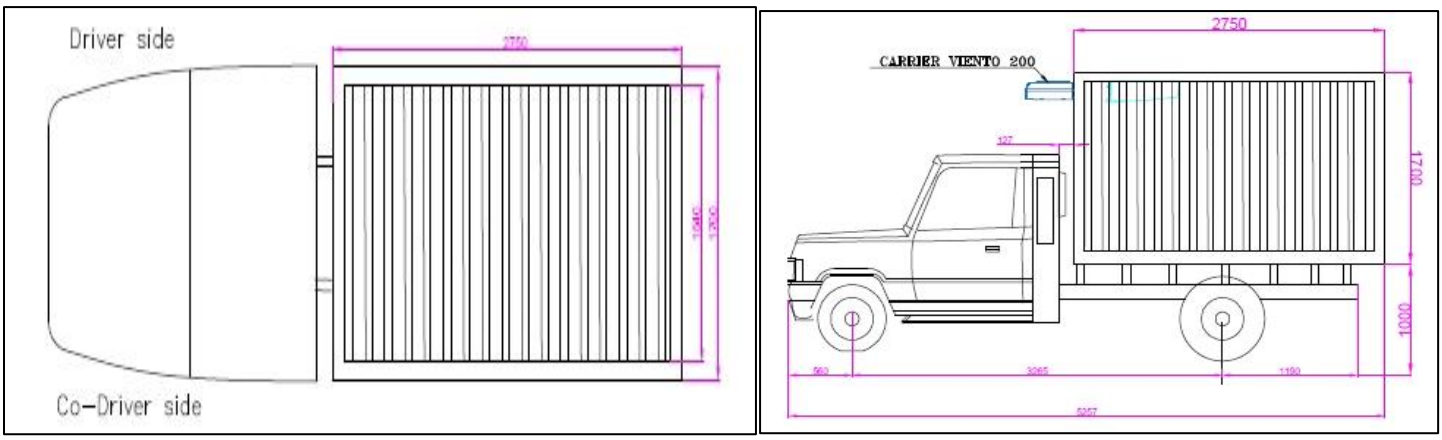

Figure 1.2: Main components

I. MS Container (Detachable) 9 ft X 5.6 ft X 5.9 ft:

This component is subjected to uniform load for Preservation of perishable Products/seedlings (Any Product like fruit, vegetable, milk, flower etc. A rectangular shape basically preferred of dimensions 9 ft X 5.6 ft X 5.9 ft. Hence based on strength, stiffness, plasticity and hardness. A recommended material is mild steel. It can be made in such a way that it can be attached and detached.

II. Cooling Unit (Carrier, Citimax 280):

This Cooling unit for -25^{0}C (-13^{0}F) to +25^{0}C (77^{0}F). Make – Carrier, Model No. Citimax 280. Also Even More Power and Safety for road only application. A choice of models designed to take into account ambient temperature: standard, high ambient and low ambient.

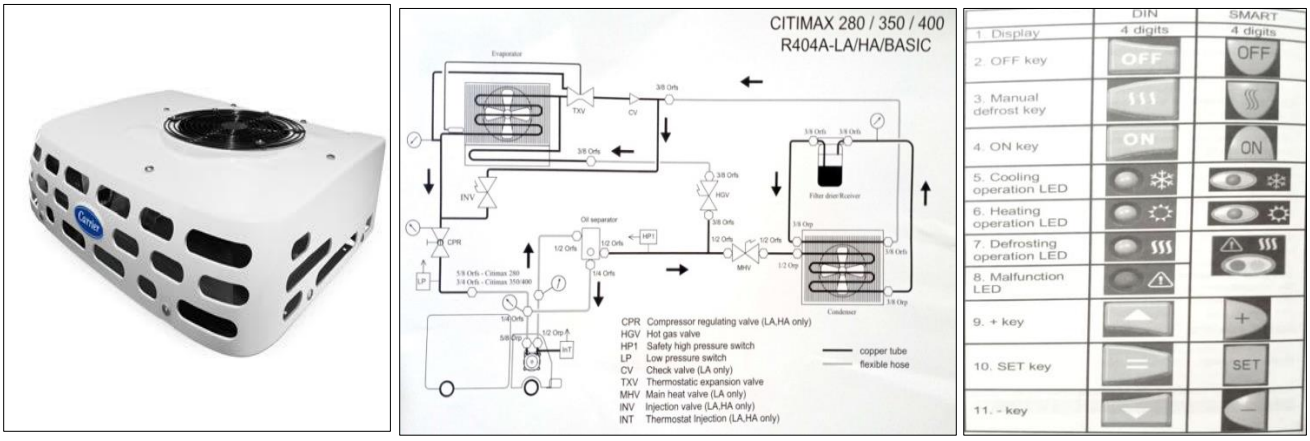

Figure 1.3: Details of Cooling Unit

Carrier Citimax 280 Unit Dimensions:

Dimensions Condenser (W x H x D): 769 x 206 x 550 mm

Dimensions Evaporator (W x H x D): 857 x 170 x 608 mm

III. Outer Panel:

Material required for outer panel is HR 1.6 mm Corrugated Sheet. It has Perfect finish, high tensile strength, Rust corrosion resistance

IV. Inner Panel:

Material required for Inner panel is SS304 0.6MM Sheet and it has excellent surface finish, Anti-abrasive. Also it should have accurate dimensions.

V. Flooring Type:

Aluminum T section is a best material for flooring selected based on its corrosive resistant due to a self-protecting oxide layer.

VI. Insulation:

A Polyurethane foam (PUF) of 40 Kg/m3 material, 100 mm Panel for flooring, 80 mm for Side Walls & Roof are used. Polyurethane foam is one of the major components of pre-insulated supports manufactured Products. Polyurethane is different from most plastic materials in that it can be tailored to meet various load requirements of varying applications.

VII. Door Hardware:

Doors for the refrigeration van are manufactured in Galvanized Steel (SS 304) material.

VIII. Lights:

Inside the van LED Lights are used.

IX. Drainage:

Proper Drainage System with necessary valves is used.

X. FRP Coating:

FRP Coating on Flooring for Leakage proof flooring**.**

XI. Door Sealing:

Sealant Material EPDM 5 Leaf Door Sealers are used.

Temperature Factors Considered While Designing the Reefer Van

- Walls, floors and ceilings increase due to heat transfer.
- The wall and ceiling receive heat from solar radiation.
- Frequent opening of the door and integration of air at the time of fresh air charge increases the load.
- Production load from incoming goods.
- Respiratory heat from stored product.
- Cooler fan load.
- Lightweight.
- Advanced equipment.
- Narrow load, if any.

Safety Precautions before using this Refrigerant Unit:

Employers need to assess the worksite to identify all possible hazards in order to select the appropriate equipment for the task. Employers who use refrigeration van need to evaluate and implement effective controls that address protection. Safe refrigeration van use includes properly maintaining the equipment, following the manufacturer's instructions, providing workers training and needed personal protective equipment (PPE), and implementing safe work practices. Following are the important parameters Operator should take care of following things for safe and

- Personnel Protective Equipment
- Working at height
- Automatic Start
- Electricity
- Cooling Oil
- Belt and Fans
- Refrigerant
- Burning with hot and cold
- Cuttings
- Battery
- Environment

Observations and Results

Figure 1.4: Observations and Results

Your temperature-sensitive products must be delivered in ideal condition. They need a stable environment during transportation with controlled temperature and the ability to maintain the integrity of the cold chain. Following final table indicates the various set point range (Results) of perishable foods,

Sr. No	Product	Set Point Range (Result)
1	Bananas	15^0C (60^0F)
2	Fresh Fruits And Vegetables	+4^0C ~ +6^0C (+39^0F ~ +43^0F)
3	Fresh Meats And Seafood	+2^0C (+36^0F)
4	Dairy Products	+2^0C ~ +6^0C (+36^0F ~ +43^0F)
5	Ice	-20^0C (-4^0F)
6	Frozen Fruits And Vegetables	-18^0C (0^0F)
7	Frozen Meats And Seafood	-20^0C (-4^0F)
8	Ice Cream	-25^0C (-13^0F)

Table 1.1: Technical Characteristic of the refrigeration van

It is essential to shut down the compartment during the periods when the doors are open, in order to maintain the temperature of the cargo in the other compartment and keep the unit operating correctly.

The technical characteristics of the lift are shown in below,

Sr. No	Description of Component	Technical Characteristic
1	MS Container	9 ft X 5.6 ft X 5.9 ft
2	Cooling Unit (Carrier, Citimax 280)	-250C (-130F) to +250C (770F)
3	Outer Panel	HR 1.6 mm Corrugated Sheet
4	Inner Panel	SS 304, 0.6 mm Sheet
5	Flooring Type	Aluminum T section
6	Insulation	PUF 40 Kg/m3, 100 mm Panel for flooring, 80 mm for Side Walls & Roof.
7	Door Hardware	In Galvanized Steel (Available in SS 304)
8	Door Sealing	EPDM 5 Leaf Door Sealers
9	FRP Coating	FRP Coating on Flooring for Leakage proof flooring
13	Wired control System	1
14	Drainage System	Pipes and Valves
15	Lights Light	LED
16	Display Board	Smart LED Display
17	Mass Weight	750kg

Table 1.2: Technical Characteristic of the refrigeration van

Applications:

- Preservation of perishable Products/seedlings and transport Any Product like fruit, vegetable, milk, flower etc.

Benefits:

- Versatility
- Temperature accuracy
- Even More Power and Safety for road only application

Advantages:

- Reduces decay rate of perishables. Fixed and Mobile type.
- Storing your perishable items in the cold storage prolongs life. Rugged design
- Temperature can be controlled as required.
- Reduces the risk of food poisoning.
- Reduces the hassle of cooking at regular intervals.
- Enables long term storage of food.

CONCLUSION

This article presented an experimental design study of an insulation wall for refrigerated integral panel van, taking into account the thermal properties of the insulating multilayer panel, the impact of the external environment (solar irradiation, temperature) and durability. The different experimental tools developed allowed the dynamic characterization of the thermal transfer within several multilayer insulation walls. The interest of increasing the wall insulation was highlighted. In particular, reflective multi-foil insulation gave good results, especially for limiting peak heat transfer and energy consumption during the daytime period. Also There are opportunities to reduce thermal loads through better insulation materials such as vacuum insulation, and the size and energy use of the refrigeration system on the truck through thermal energy storage based on phase change materials (PCMs) that can be charged at base.

REFERENCES

J. Moureh, N. Menia, D. Flick "Numerical and experimental study of airflow in a typical refrigerated truck configuration loaded with pallets" Computers and Electronics in Agriculture 34 (2002) 25–42

Munesh Kumar Sharmaet and D. Buddhi, "Performance Studies of Refrigerated Van having PCM for Generating Off Site Refrigeration Effect" Journal of Pure and Applied Science & Technology Copyright © 2011 NLSS, Vol. 3(1), Jan 2013, pp. 1-12

Patrick Glouannec et al, "Experimental and numerical study of heat transfer across insulation wall of a refrigerated integral panel van". Applied Thermal Engineering 73 (2014) 194e202

S.A. Tassou a, et al "A review of emerging technologies for food refrigeration applications" Applied Thermal Engineering 30 (2010) 263–276

SilviaEstrada-Flores, Andrew Eddy, "Thermal performance indicators for refrigerated road vehiclesIndicateurs de performance thermique pour les véhicules frigorifiques routiers" International Journal of Refrigeration Volume 29, Issue 6, September 2006